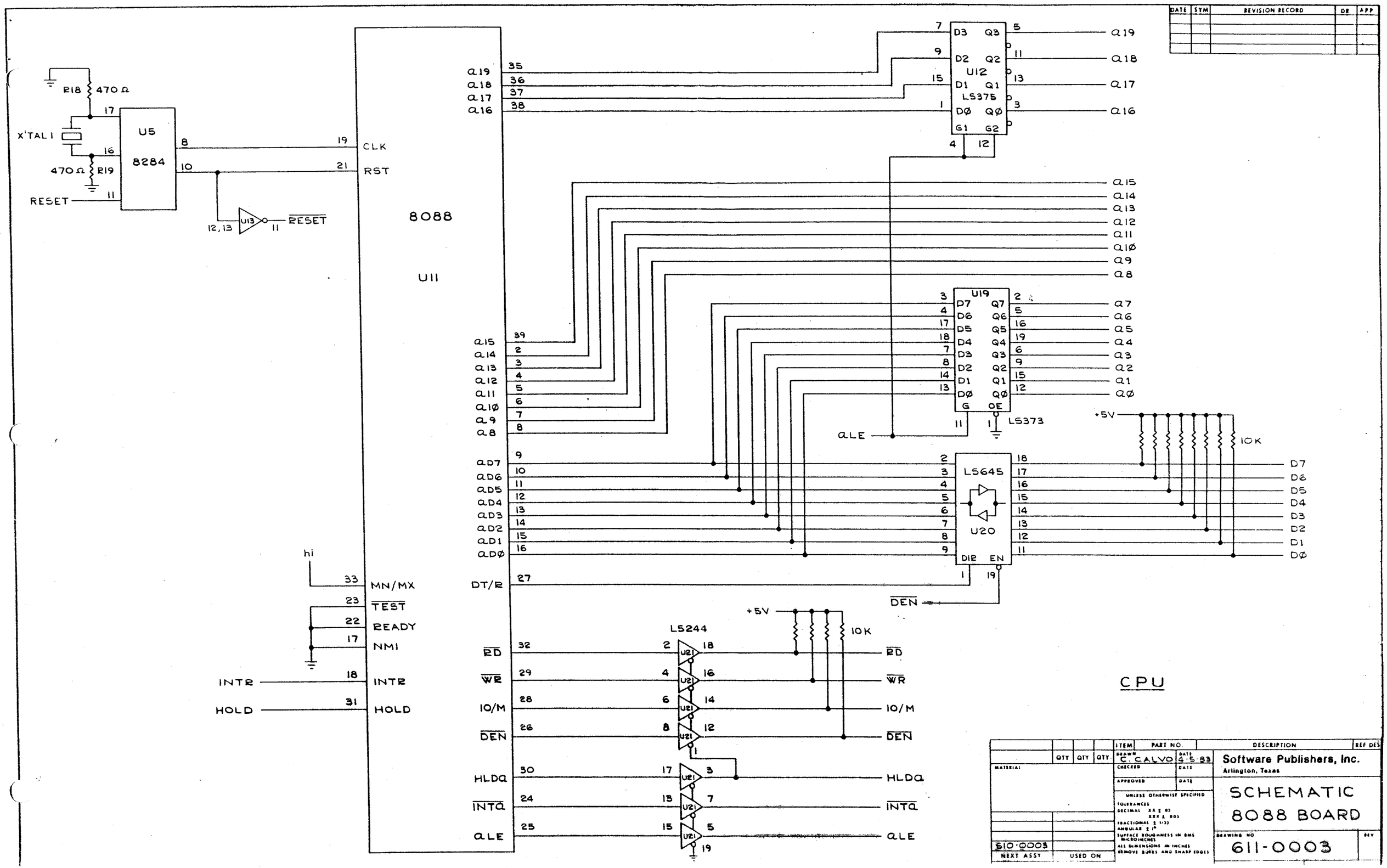

DATE
SYM
REVISION RECORD
DR
APP
R18
470 Ω
X'TAL 1
U5
8284
470 Ω
R19
RESET
U13
RESET
CLK
RST
8088
U11
a19
a18
a17
a16
a15
a14
a13
a12
a11
a10
a9
a8
aD7
aD6
aD5
aD4
aD3
aD2
aD1
aD0
DT/R
hi
MN/MX
TEST
READY
NMI
INTR
HOLD
RD
WR
IO/M
DEN
HLDa
INTa
aLE
U12
LS375
U19
LS373
aLE
+5V
10K
LS645
U20
DIR
EN
DEN
LS244
U21
CPU
ITEM
PART NO.
DESCRIPTION
REF DES
QTY
MATERIAL
DRAWN
C. CALVO
DATE
4-5-83
CHECKED
APPROVED
UNLESS OTHERWISE SPECIFIED
TOLERANCES
DECIMAL
FRACTIONAL
ANGULAR
SURFACE ROUGHNESS IN RMS MICROINCHES
ALL DIMENSIONS IN INCHES
REMOVE BURRS AND SHARP EDGES
Software Publishers, Inc.
Arlington, Texas
SCHEMATIC
8088 BOARD
DRAWING NO
611-0003
REV
610-0003
NEXT ASSY
USED ON